Maintenance & Installation



MAVERICK
POLES AND STRUCTURE, LLC.
817-441-9688

The information contained herein is required distribution to all installation and maintenance personnel. This information represents installation instructions, which are solely factory recommendations and general maintenance procedures. Factory recommendations should be regarded as such. These instructions should not exclude qualified contractors with competent personnel and certified equipment from utilizing any unique or specific knowledge or personal experiences for either installation or maintenance purposes. The durability and longevity of these products is dependent upon competent installation and regularly scheduled maintenance reviews by qualified personnel.

Maverick Poles and Structure, LLC (referred to as MPS throughout this manual) cannot be held responsible for any damage, which occurs during or after installation, or for any structure, which has been modified or utilized in a way other than for which it was originally designed and/or intended. If questions arise concerning the installation or maintenance of these products, the factory must be consulted at (817) 441-9688 or (817) 926-5003 fax.

“MPS” provides this Maintenance & Installation Manual, as a guide to be used in the installation and maintenance of “MPS” products covered by this manual. Personnel involved in installation and maintenance shall comply with all applicable laws, rules and regulations and shall use all of the generally accepted practices and guidelines in their fields in connection with installation and maintenance of “MPS” products. This manual shall not be construed to replace or change the applicability of laws, rules regulations or otherwise appropriate standards and practices with respect to installation and maintenance of products. A customer or a company involved in installation and/or maintenance of “MPS” products shall utilize the services of their own certified engineers or other applicable professionals and shall follow the advice and direction of such professionals.

Please visit our website at www.maverickpoles.com for the most complete and latest installation and maintenance information.

TABLE OF CONTENTS

UNLOADING & STORAGE

The Bill of Lading should be reviewed carefully and checked to verify complete delivery of all required materials and/or equipment. Quantities of all materials, including boxes, cartons, crates, and pallets should be verified. Shipment shortages should be communicated immediately to the factory and must be clearly noted on the Bill of Lading by the person in charge of receiving or other duly noted representative. All quantities as well as the condition of all materials must also be verified and noted on the Bill of Lading. Any damages must be reported immediately. Unreported or late reporting of shipping damage may nullify any potential future claims. The Bill of Lading must be signed at time of delivery.

Figure 1 - Proper Unloading

During the unloading procedures, only qualified, competent personnel and equipment should be utilized. Forklifts and cranes are most commonly used for unloading and handling of poles and related materials. When unloading with a crane, only nylon straps should be utilized to prevent damage to the surface finish of the pole structures. For forklift unloading, either side-lift or spear techniques should be employed (see figure 1). On side-lift operations it is vital that the forks do not come in direct contact with the pole shaft surface especially when the finish is either liquid painted or powder coated. Use the factory-provided foam barriers as lifting/contact points (see figure 2). On spear operations, the forklift operator should only lift from the base end of the structure. The operator should take extra precautions not to damage the hand hole frame or grounding lug that is approximately 18" from the base of the shaft. In either the side-lift or spear methods only competent and previously qualified and trained fork lift operators should be utilized.

Figure 2– Foam Lifting Points

Structures, which need to be stored prior to installa-

Figure 3 - Warning Label

tion, must be protected from moisture. Any wrapping materials must be removed prior to storage (See warning label attached to base of pole, figure 3). Adequate space between the ground and the structures is required to insure safe storage. It is recommended that a minimum of 6" be maintained between the ground and poles during storage (see figure 2). Structures placed in direct contact with the ground presents a high risk of surface finish violation, which may lead to deterioration of the finish. It is recommended that the supports (dunage) used to elevate the product from the ground be made of wood, padded with foam, or otherwise padded materials to insure that the finish is not damaged during placement and storage (see figure 6).

Figure 4 - Proper Storage

Figure 6 - Foam Blocks

Figure 5 - Foam Lifting Points

SLIP JOINTS

Before assembly, the top and bottom of shaft sections must be inspected, both inside and out for foreign objects such as burrs, dirt, or galvanizing build-up. Any such items should be cleaned and removed to prevent potential slip problems.

Although pole sections can be jacked together in either a horizontal or vertical position, the factory recommends assembling the poles in a horizontal position. To facilitate the assembly of the pole sections, mating surfaces should be lubricated with soapy water. Other lubricants may be used, but care should be taken not to use a lubricant that may later leak from the joint and stain the pole.

The contractor should mark the male pole section with a marker to designate the minimum slip distance as detailed in the submitted project drawings. If drawings are not available, please contact the factory for minimum slip distances. Typically, minimum slip distances are equal to 1.5 times the female section inside diameter at the slip joint elevation. Manufacturing tolerances may allow the pole to slip past the minimum slip distance. Any distance past the minimum length is acceptable. The joint must be tight with no gaps.

It is extremely important that the pole sections are aligned properly prior to slipping the sections together. The orientation of all appurtenances on the pole should be in an alignment consistent with the "MPS" pole drawings. When viewing an "MPS" pole drawing, primarily the top view for stub base and anchor base type pole assemblies, there is typically one bolt hole on the base plate at the zero degree, or North orientation (4-bolt patterns have 2 bolts at 45 degrees from the North direction). It is critical that the cross arms and/or cages are aligned perfectly perpendicular to this northerly-facing anchor bolt orientation.

The recommended method for applying the necessary force to achieve a tight joint is the use of a ratcheting device (i.e. come-along) with at least a 2 ton capacity on either side of the pole. Some poles may have welded "D" rings on each pole section. They should be aligned and

Figure 7 - Proper Slip Joint

Figure 8 - "D" Rings

the ratcheting device (come-alongs) should be securely attached to each side of the pole (see figure 10). As a note of reference, these "D" rings are used as jacking assist points, as general orientation markers and as lifting points during the galvanizing process (see figure 8). Care should be taken to assure that the sections are straight and not binding during the jacking process. If pole sections are misaligned (i.e. not parallel), the sections can wedge together. Some designs utilize a different slip process.

To facilitate the joint tightening, the advancing section supported by the crane may be gently oscillated and/or the joint area may be cushioned with a block of wood and the block of wood struck with a hammer

Figure 9 - Improper Slip Joint

Figure 10 - Slip Joint Assembly

(taking care not to strike or otherwise damage the pole).

Warning: If the slip joint, when jacked together, comes within 2 inches of a step clip (when applicable) then the factory must be consulted (see figure 9).

In the event that the minimum slip distance is not satisfied, do not erect pole. Contact factory for authorization of a mechanical connection.

MAVERICK POLES AND STRUCTURE, LLC. 817-441-9688

ELECTRICAL WIRING

Typically, electrical wiring enters the pole though either an access hole in the center of the base plate (for anchor base type poles) or access holes located 24 inches below grade (for embedded or stub base poles). Conduit should be directed through these entrances and raced with wiring to supply power to the pole. For anchor base poles, conduit should project from the top of the foundation a minimum of 6" into the base of the pole.

After checking for burrs and sharp edges on surfaces in potential contact with any wiring, all wiring should be strung through the pole through one or more internal cable guides (on all poles greater than 50 feet), accessible through the adjacent hand holes (see figure 11). Strain relief mechanisms such as bus drops (see figure 12) should be used to alleviate tension on any electrical wiring.

One ground lug is included on each pole located opposite the base hand hole on the inside face of the pole.

Figure 11 - Internal Cable Guide (CAB-GID-01)

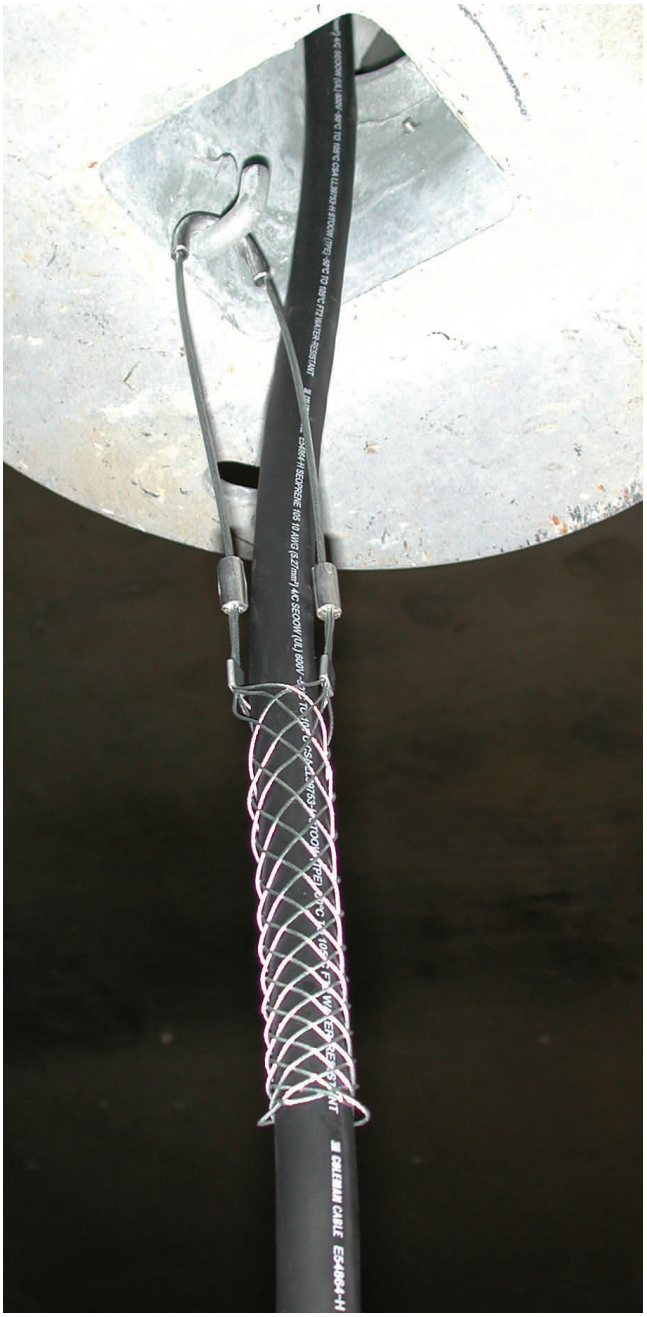

Figure 12 - Strain Relief

CLIMBING / SAFETY

All climbing steps should be installed on the pole prior to pole erection. To install climbing steps, screw one nut on to each step (bolt) as far as possible. Insert the other nut behind the lug on the pole and screw the step in until the step touches the surface of the pole tube. Tighten the outer nut against the lug sufficiently to prevent it from loosening (see figure 13). Caution: Do not over-tighten to the point of damaging the threads.

If the slip joint, when jacked together, comes within 2 inches of a step clip, then the factory must be consulted prior to pole erection (see figure 9).

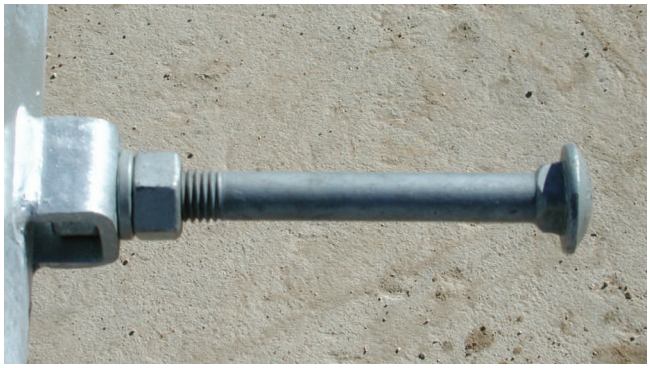

Figure 13 - Climbing Step (STEP-01)

The safety cable should be attached to the top cable stop on the cage prior to shipment. The cable should be strung through the intermediate cable guides and terminated at the bottom cable stop on the pole (see figures 14,15 & 21).

As a note of reference, the safety equipment supplied by "MPS" is manufactured by Gemtor, Inc. (www.gemtor.com). The corresponding Gemtor part numbers are:

Safety Brake:	**VW651**
Lanyard:	**261L**
Safety Harness:	**933-2**
D-Ring	**2027-1**

To service the pole, attach the "D" ring on the safety harness directly to the safety brake. The safety brake should be attached to the safety cable. Once entering the cage, attach lanyard to "D" ring and to cage, then disconnect from the safety brake. Do not disconnect from safety brake without a secure connection with the lanyard.

Note: Only competent, experienced and qualified personnel are permitted to climb pole or perform any maintenance work.

Figure 14 - Bottom Cable Stop (CAB-STP-B1)

MAVERICK POLES AND STRUCTURE, LLC. 817-441-9688

Figure 15 - Intermediate Guide (CAB-STP-I1)

Figure 18 - Lanyard (261L)

Figure 16 - Safety Brake (VW651)

Figure 17 - D-Ring (2027-1)

Figure 19 - Harness (933-2)

PLATFORMS

Figure 20 - Completed Top--mount Platform Assembly

Platforms shall be attached with either ASTM A325 connecting bolts (top-mount) or ASTM A36 U-bolts (side-mount). Please refer to page 36 for bolt tightening information.

To attach the cage to pole top (top-mounted cages only), wires should be raced through hole in top plate and the mating plate on the cage. The cage should be secured to pole with the supplied connecting hardware.

To attach the cage to the side of the pole (side-mounted cages only), wires should be raced through the hole or coupling located at the center of the cage connecting plate. The wiring should enter the pole at one of the supplied couplings at the cage elevation. Flexible conduit can be used for this purpose, depending on project requirements or specifications.

Figure 21 - Top Cable Attachment Point

MAVERICK POLES AND STRUCTURE, LLC. 817-441-9688

Figure 22 - Platform Assembly

Prior to installing the cage, the orientation of the cage, cross arms or any other appurtenances must be checked in relation to the base plate and/or foundation. Any misalignment of shaft sections or foundations must be corrected prior to the installation of these components.

The safety climbing cable should be securely attached to the top cable stop located on the cage (see figure 21). The wire should then be guided through the slot on the platform door (see figure 23). The cable should be guided through the intermediate cable guides mounted on the exterior of the pole shaft and terminated at the bottom cable stop.

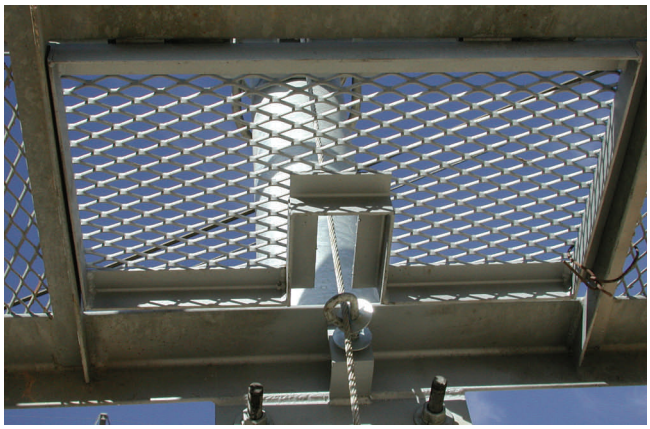

Figure 23 - Slot in Platform door

Figure 24 - Cage Secured with U-bolts

Figure 25 - Side-mounted Platform

CROSS ARM BRACKETS

Cross arm brackets shall be attached with ASTM A325 connecting bolts or A36 U-bolts for top-mount and side-mount options respectively. Electrical wires should be raced through the center hole in the top plate for top-mounted cross arms or through the hole in the center of the side-mounted attachment plate and then into the appropriate coupling on the pole. Flexible conduit can be used to conceal the wiring, depending upon project requirements or specifications.

Figure 27 - Top-mount Tubular Cross Arm

Figure 26 - Side-mount Tubular Cross Arms

Figure 28 - Side-mount Angle Cross Arm

Figure 29 - Top Mount Cross Arm

Figure 30 - Tubular Cross Arm

Figure 31 - Angle Cross Arm

MISCELLANEOUS BRACKETS

All miscellaneous brackets (bullhorns, upswept arms, spoke arms, etc.) should be attached per the project specifications and/or Maverick Poles and Structure, LLC's specifications with the supplied hardware. If specific installation information is required, please consult factory (817) 441-9688.

Figure 32 (BHR-218)

Figure 33 (BHR-318)

Figure 34 (BHS-100)

Figure 35 (BHS-100)

Figure 36 (BHR-490)

Figure 38 (BHR-100)

Figure 37 (BHS-318)

Figure 39 (BHR-490)

ANCHOR BASE FOUNDATION

The following written procedure is provided as a general guideline and should be used in conjunction with the illustrations detailed on pages 18 and 19. In addition to using these guidelines, it is recommended that foundation contractors with specific knowledge or familiarity with these types of foundations, draw upon their personal experience and expertise during the construction process. Work should not be performed on any foundation until appropriate design approval has been granted and all necessary materials have been delivered and inspected. Local building codes must also be considered prior to installation.

Although several types of foundations such as caisson, spread, or pile can be used to support the pole structures, Maverick Poles and Structure, LLC recommends caisson type foundations since they are the most commonly used and easiest to construct (see figure 40).

A basic caisson foundation is constructed by first, auguring a hole in the ground to the diameter and depth outlined in the approved foundation design drawings and/or as shown in the contract plans.

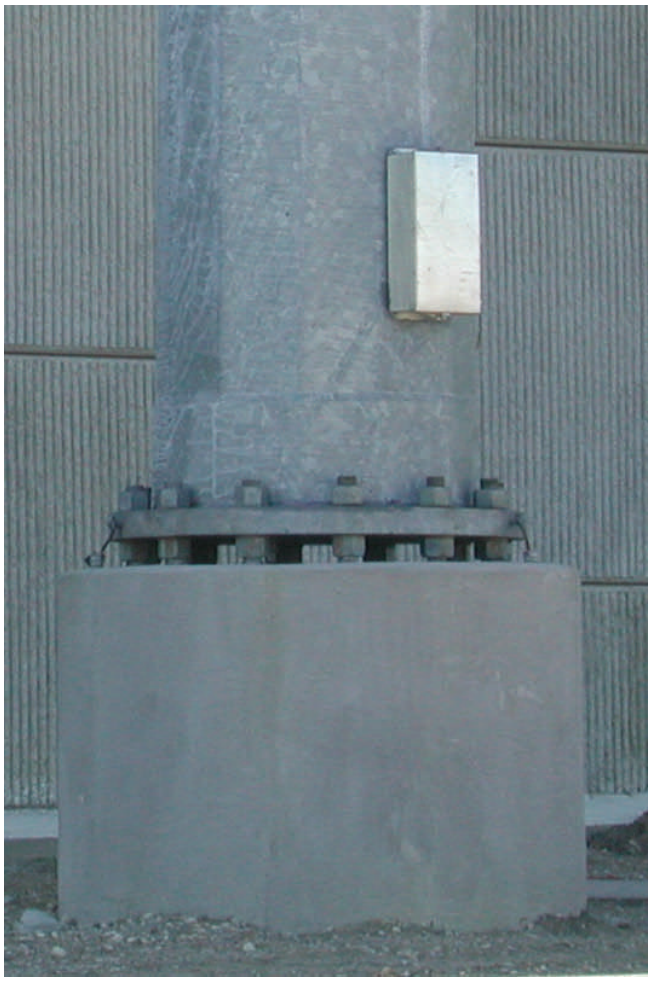

Figure 40 - Anchor Base Foundation

Figure 41 - Standoffs

Since concrete does not support tension forces very well, caisson foundations require steel reinforcing bars to carry any tension loads developed in the concrete foundation. These vertical reinforcing bars should extend the full depth of the foundation, but should have at least 3 inches of concrete cover on all sides, top and bottom. These vertical reinforcing bars should be tied together to form a “cage” with smaller bars (typically size #4 or #3), both meeting the requirements outlined in the foundation design

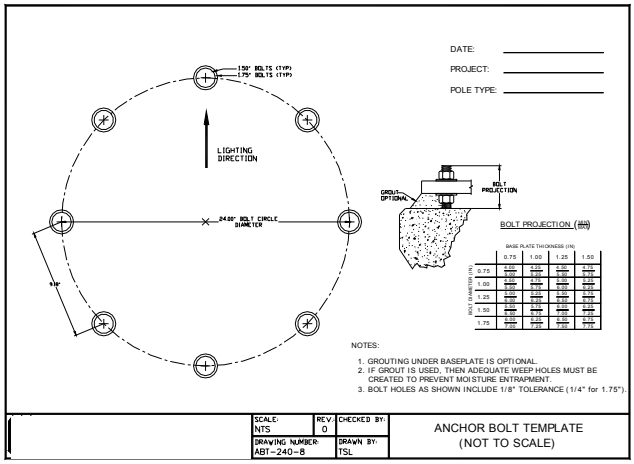

Figure 42 - Paper Anchor Bolt Template

drawings. These cages should be assembled by a previously qualified person or company familiar with this type of work. Please note that most companies which supply reinforcing bars will tie the bars together and deliver these “cages” to the jobsite for a nominal fee. After the reinforcing cages are constructed, the hole must be prepared for concrete placement. Concrete blocks or bricks or other standoff devices should be placed in the bottom of the augured hole to support the reinforcing cage. Standoffs, specifically designed for reinforcing bars should be attached to the vertical bars in a manner to ensure a minimum gap between the edge of the augured hole and the reinforcing bars of at least 3 inches on all sides (see figure 41). These supports will allow concrete to totally envelop the reinforcing bars and maintain the 3” of minimum concrete cover required by the American Concrete Institute.

To accommodate the underground electrical wiring, trenches should be dug to a depth consistent with local electrical codes, typically 24 inches. Conduit should be placed in the trenches and angled upward through the middle of the foundation. The conduit should be secured in a manner which it will not “float” when the concrete is poured. It is critical that the conduit is in the center of the foundation and extends at least 6 inches into the base of the pole.

Figure 43 - Reinforcing Cage

The last step before concrete placement is to cap the augured hole with a piece of Sono-tube. This pressboard tube should match the diameter of the augured hole and should not extend any further than 6 inches into the augured hole and should extend at least 3 inches above the top of the vertical reinforcing bars. This tube gives the top portion of the foundation a smooth finished appearance. Please note that care should be taken to secure the Sono-tubing so it will not "float during concrete placement.

Once the Sono-tube, conduit and reinforcing bars are secure, the hole can be filled with concrete meeting the requirements of the project plans designed by the project engineering firm. As the concrete is being poured, it should be vibrated to eliminate air pockets in accordance with concrete industry standard practices.

For High Mast and Sports poles, steel anchor bolt templates are supplied for each different base configuration. For all other poles, paper anchor bolt templates, either full-scale or construction, are supplied with each pole and are included with the packing slip attached to the anchor bolts. Steel templates can either be used to set the anchor bolts or can be used as a template to transfer the pattern on to a piece of plywood or other heavy-duty material. The bolt pattern on the paper templates should be transferred to a piece of plywood and the plywood template used to set the anchor bolts (see figure 42).

To set the anchor bolts, first align the template in the center of the foundation and rest on the top of the Sono-tube. Thread one nut onto an anchor bolt to allow for an anchor bolt projection (above top of concrete) which will accommodate the base plate, two flat washers, a top nut and leveling nut, plus room for adjustment of the leveling nuts. For specific anchor bolt projection lengths, please reference the table on the paper anchor bolt template. Insert one anchor bolt into the template and push into the concrete until the nut rests on the template. If using anchor bolts with hooks, the hook can face in any direction, but the preferable orientation is hooks outward, given there is at least 3 inches of concrete between the end of the hook and the edge of the augured hole. Care should be taken to assure that the bolts are plumb. Repeat procedure for remaining anchor bolts. Once all of the bolts are set and plumb, the concrete must be vibrated to ensure a strong bond exists between the concrete and the bolts. The concrete must be allowed to cure to its full compressive strength before any loads can be applied.

When the foundation is cured, the bolts should protrude from the concrete in a vertical (90^0) orientation to the top of the footing. Bolts should be equally spaced from one another and from the center point of the foundation. The anchor bolt pattern should easily accommodate the base plate of the pole structure.

One leveling (bottom) and one top (hold-down) nut should be utilized per anchor bolt. One flat washer (bottom) and one top (hold-down) washer should be utilized per anchor bolt. Space between the top of the foundation and bottom of the pole base plate is required to insure ventilation. Grout pack (non-shrink grout) may be used at the discretion of the installing contractor but must be thoroughly vented with applicable weep/drainage outlets.

Figure 44 - Anchor Bolt Projection

STEP 1

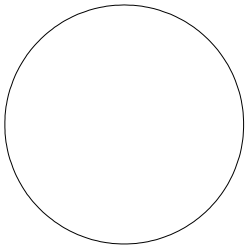

STEP 2

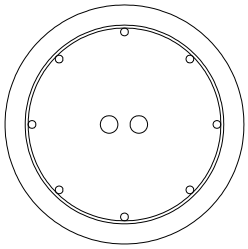

STEP 3

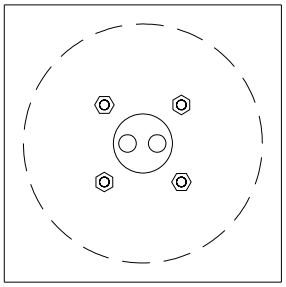

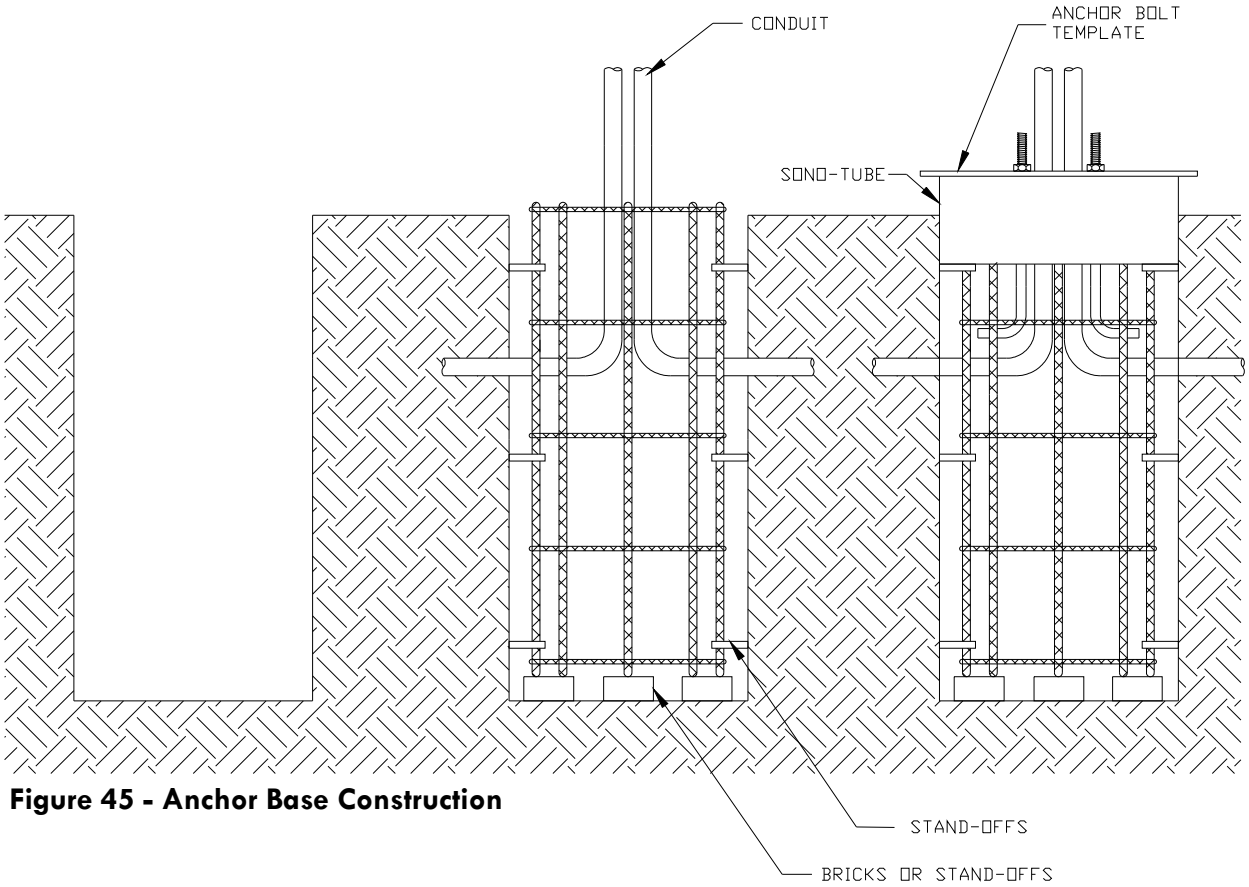

Figure 45 - Anchor Base Construction

STUB BASE FOUNDATION

The following written procedure is provided as a general guideline and should be used in conjunction with the illustrations detailed on pages 22 and 23. In addition to using these guidelines, it is recommended that foundation contractors with specific knowledge or familiarity with these types of foundations, draw upon their personal experience and expertise during the construction process. Work should not be performed on any foundation until appropriate design approval has been granted and all necessary materials have been delivered and inspected. Local building codes must also be considered prior to installation.

Figure 47 - Stub Base Foundation

Although several types of foundations such as caisson, spread, or pile can be used to support "MPS" pole structures, "MPS" recommends caisson type foundations since they are the most commonly used and easiest to construct (see figure 47).

A basic caisson foundation is constructed by first, auguring a hole in the ground to the diameter and depth outlined in the approved foundation design drawings and/or as shown in the contract plans.

Concrete blocks, bricks or other stand-off devices should be placed in the bottom of the augured hole to support the stub base and allow the concrete to totally envelop the stub base to maintain the 3" of minimum concrete cover required by the American Concrete Institute.

A wooden "H" form should be constructed from 2" x 6" lumber similar to the illustration on page 25. This form should be laid across the augured hole and leveled. The stub base should be lowered through the wooden forms and into the augured hole. This form is used to support the stub base during concrete placement. When installing the stub base, care should be taken to ensure the stub base is plumb prior to and during concrete placement.

Since concrete does not support tension forces very well, most caisson foundations require reinforcing bars to carry any tension loads developed in the concrete foundation. In lieu of reinforcing bars, the embedded pipe section provides enough strength to sufficiently support the tension created within the foundation. Therefore, reinforcing bars are typically **not** required for stub base type installations.

The stub base is equipped with two access holes located 30 inches below the flange or top plate. These holes are positioned 180 degrees apart and should be used as a below-grade wire entrance. To accommodate the underground electrical wiring, trenches should be dug to a depth consistent with local electrical codes, typically 24 inches deep. Conduit should be placed in the trench and routed through the conduit entrance holes located 24 inches below the ground-line in the stub base section. The conduit should be angled up through the middle of the stub base. It is critical that the conduit is in the

center of the stub base and that it extends at least 6 inches above the top plate of the stub base.

The augured hole around the perimeter of the stub base can now be filled with concrete meeting the requirements of the project plans and specifications and/or the approved foundation design drawings. As the concrete is being poured, it should be vibrated to eliminate air pockets in accordance with standard industry practices. When the augured hole is approximately half full with concrete, the "H" form and stub base should be checked for level and plumb respectively.

The concrete should then be poured to the groundline, leaving approximately 6 inches of space between the concrete and bottom of the top plate on the stub base section. Concrete placement in the center of the stub base is not required, but may be done at the contractors discretion. A final check for plumb should be performed at this time.

After 48 hours, the wooden forms can be removed and, depending upon meteorological conditions (i.e. nice weather) the poles can be erected. For aesthetic purposes, grout pack (non-shrink grout) may be used at the discretion of the installing contractor to fill the void between the top of the concrete and the base plate.

If the stub base is not plumb after concrete has cured, please consult factory for issuance of standard leveling shims.

Mastic Coating:
It should be mentioned that Maverick Poles and Structure, LLC treats all stub base and embedded pole products with an additional coating of black asphaltum (mastic coating) over the galvanized finish. Although this is not required or necessary, American "MPS" includes this as a value-added feature. Mastic is typically used for as an undercoating for automobile frames and wheel wells and is specifically designed for highly acidic and corrosive environments.

Figure 48 - Stub Base with Mastic Coating

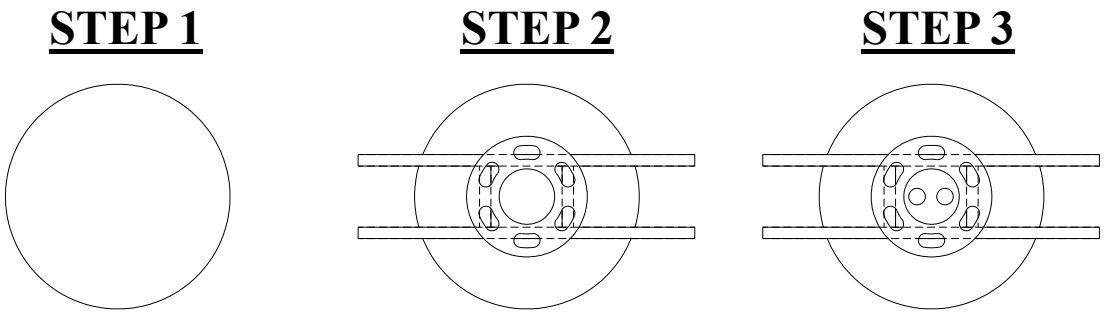

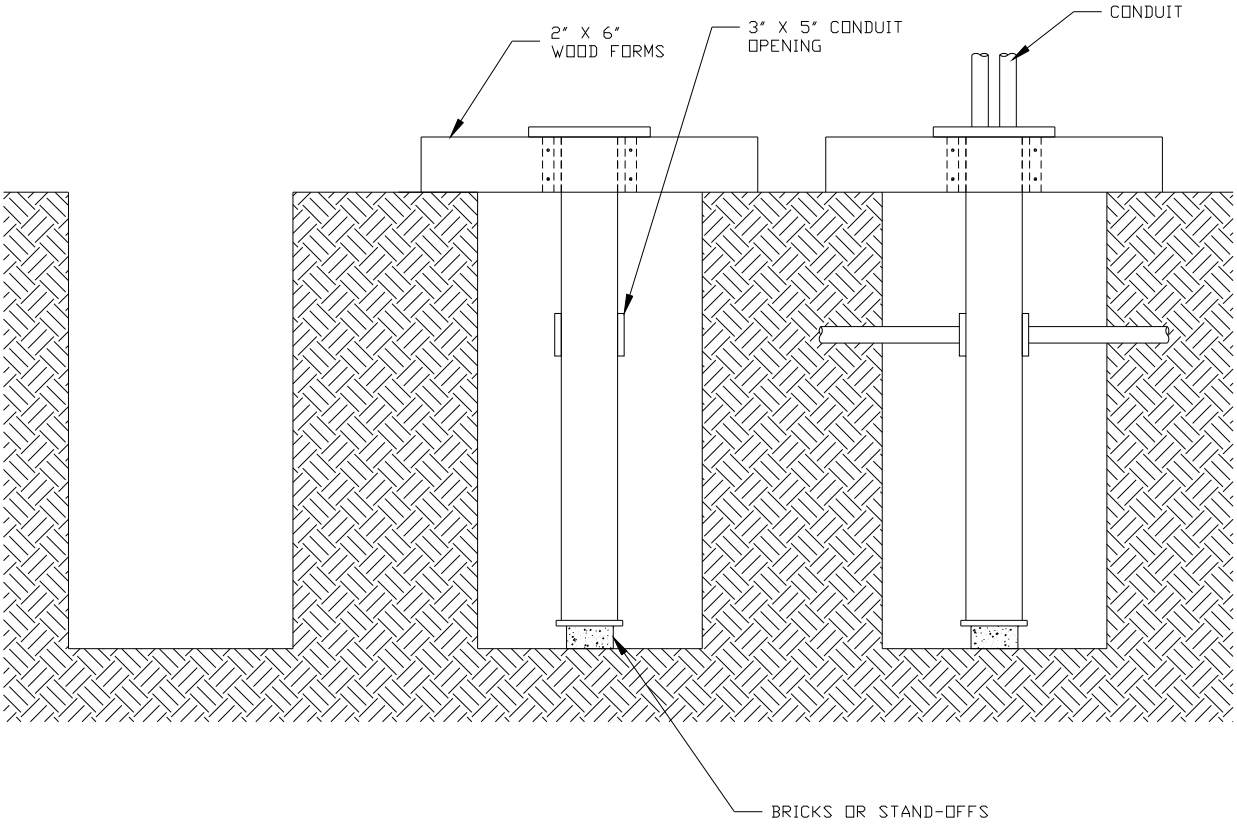

Figure 49 - Stub Base Construction

DIRECT EMBEDDED FOUNDATION

The following written procedure is provided as a general guideline and should be used in conjunction with the illustrations detailed on pages 28 and 29. In addition to using these guidelines, it is recommended that foundation contractors with specific knowledge or familiarity with these types of foundations, draw upon their personal experience and expertise during the construction process. Work should not be performed on any foundation until appropriate design approval has been granted and all necessary materials have been delivered and inspected. Local building codes must also be considered prior to installation.

Although several types of foundations such as caisson, spread, or pile can be used to support Maverick Poles and Structure, LLC pole structures, "MPS" recommends caisson type foundations since they are the most commonly used and easiest to construct (see figure 51).

A basic caisson foundation is constructed by first, auguring a hole in the ground to the diameter and depth outlined in the approved foundation design drawings and/or as shown in the contract plans.

Concrete blocks, bricks or other stand-off devices should be placed in the bottom of the augured hole to support the pole structure and allow the concrete to totally envelop the embedded pole section to maintain the 3" of minimum concrete cover required by the American Concrete Institute.

Wooden wedges should be constructed from 2" x 12" lumber similar to the illustration on page 29. The pole assembly should be lowered into the augured hole, centered, and leveled. The wooden wedges should be placed between the pole and edged of the augured hole. These wedges are used to support the embedded pole during concrete placement. When installing the embedded pole, care should be taken to ensure that it is plumb prior to and during concrete placement.

Since concrete does not support tension forces very well, most caisson foundations require reinforcing bars to carry any tension loads developed in the concrete foundation. In lieu of reinforcing bars, the embedded pole section provides enough strength to sufficiently support the tension created within the foundation. Therefore, reinforcing bars are typically **not** required for embedded pole installations.

The embedded pole section is equipped with two access holes located 24 inches below the ground-

Figure 51 - Direct Embedded Foundation

line. These holes are positioned 180 degrees apart and should be used as a below-grade wire entrance. To accommodate the underground electrical wiring, trenches should be dug to a depth consistent with local electrical codes, typically 24 inches deep. Conduit should be placed in the trench and routed through the conduit entrance holes located 24 inches below the ground-line in the embedded pole section. The conduit should be angled up through the middle of the pole. It is critical that the conduit is in the center of the pole and that it extends at least 6 inches above the ground-line.

The augured hole around the perimeter of the pole can now be filled with concrete meeting the requirements of the project plans and specifications. As the concrete is being poured, it should be vibrated to eliminate air pockets in accordance with standard industry practices. When the augured hole is approximately half full with concrete, the pole should be checked for plumb and adjusted accordingly.

The concrete should then be poured to the ground-line and the pole checked for plumb. Once the pole is plumb the wedges can be removed. The concrete should be vibrated to fill the voids left by the wedges. If supplemental bracing is necessary, it should be done at the contractors discretion.

After 48 hours, any of the supplemental bracing can be removed depending upon meteorological conditions (i.e. nice weather).

Figure 53 - Embedded Poles

Mastic Coating:
It should be mentioned that “MPS” treats all stub base and embedded pole products with an additional coating of black asphaltum (mastic coating) over the galvanized finish. Although this is not required or necessary, “MPS” includes this as a value-added feature. Mastic is typically used for as an undercoating for automobile frames and wheel wells and is specifically designed for highly acidic and corrosive environments.

Figure 52 - Embedded Poles

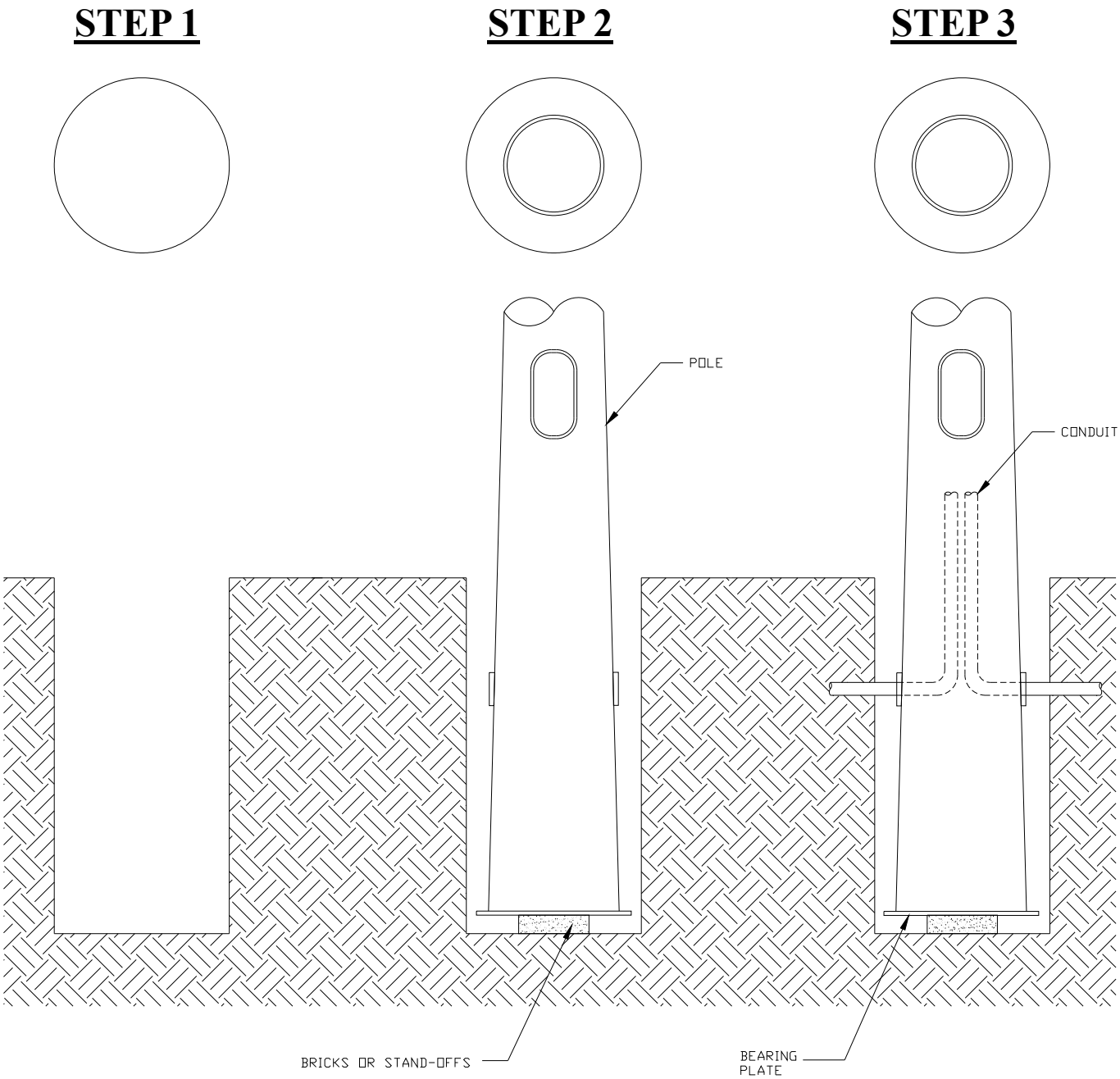

Figure 54 - Embedded Base Construction

POLE ERECTION

The following written procedure is provided as a general guideline It is recommended that contractors with specific knowledge or familiarity with these types of installations, draw upon their personal experience and expertise during the erection process. It is recommended that no work be performed on any structure until design approval has been granted and all necessary materials have been delivered and inspected.

The entire pole assembly should be fully assembled on the ground per the recommended Maverick Poles and Structure, LLC installation instructions on the previous pages. It should then be rigged with Nylon straps in preparation for the lifting or erection process. Nylon straps should be used in lieu of chains, which could damage the finish of the pole. The strap should be placed through the hand hole at the base of the pole and then through the hole in the center of the base plate or the base of the pole for embedded pole applications (see figure 56). A tag-line should be attached at approximately 75% of the pole height to stabilize the pole during erection. The come-alongs used in the assembly of the pole sections should remain attached to the "D" rings (if provided) during the erection process. The pole assembly should be lifted initially from the Tag/Rig point at 75% of the pole elevation. As the pole is raised and approaches a vertical position, the weight/lift point transfers to the Rig position at the base of the pole assembly.

The pole assembly should be slowly lowered either into the augured hole, onto the flange of the stub base or onto the anchor bolts for embedded, stub and anchor base installations respectively. For anchor base type poles, please install leveling nuts before the pole is lifted into position.

The procedure outlined above should be used only as a general guideline. It is the sole responsibility of the crane operator to select suitable lifting equipment and ultimately determine the correct rigging requirements and positions for lifting and setting. Erection of the poles should only be performed by an experienced and competent crane operator. Great care should be taken to avoid sudden movements or jerking of the pole structure during erection.

Figure 56 - Bottom Lifting Point

Figure 57 - Top Tag/Rigging Point

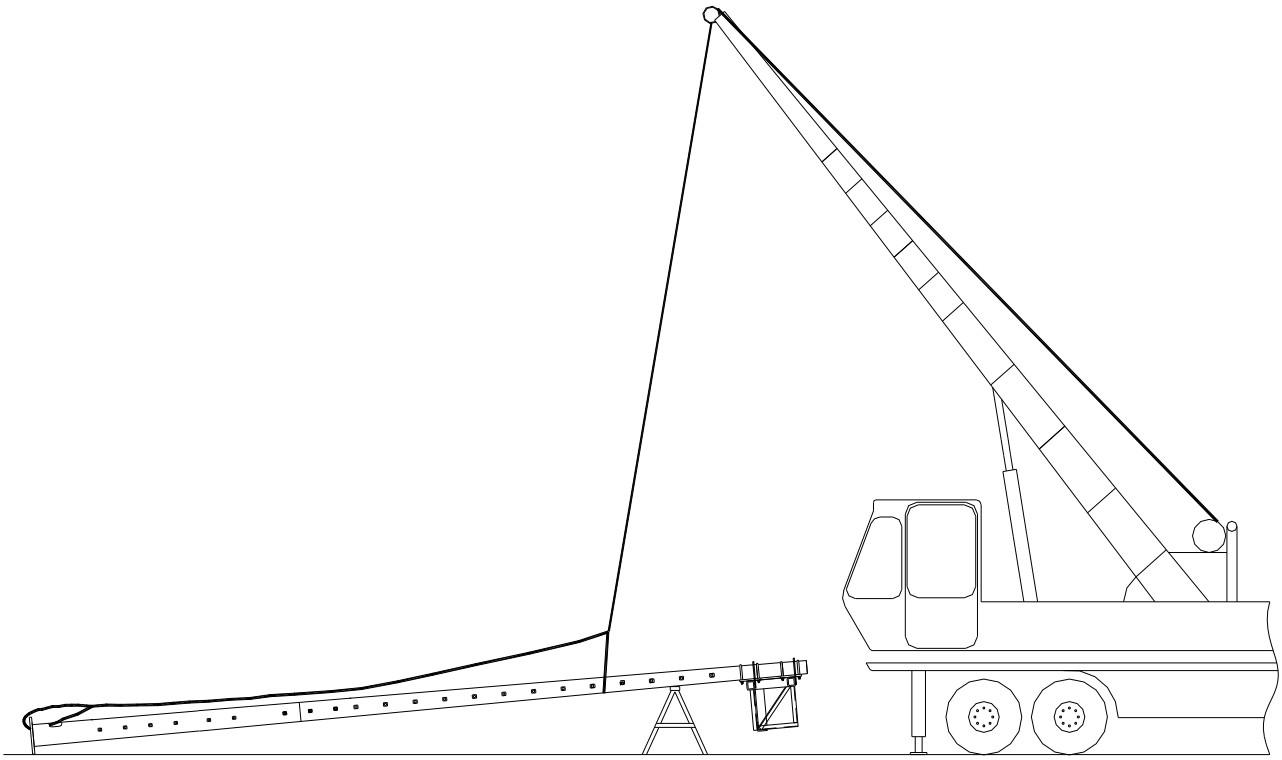

Figure 58 - Pole Erection

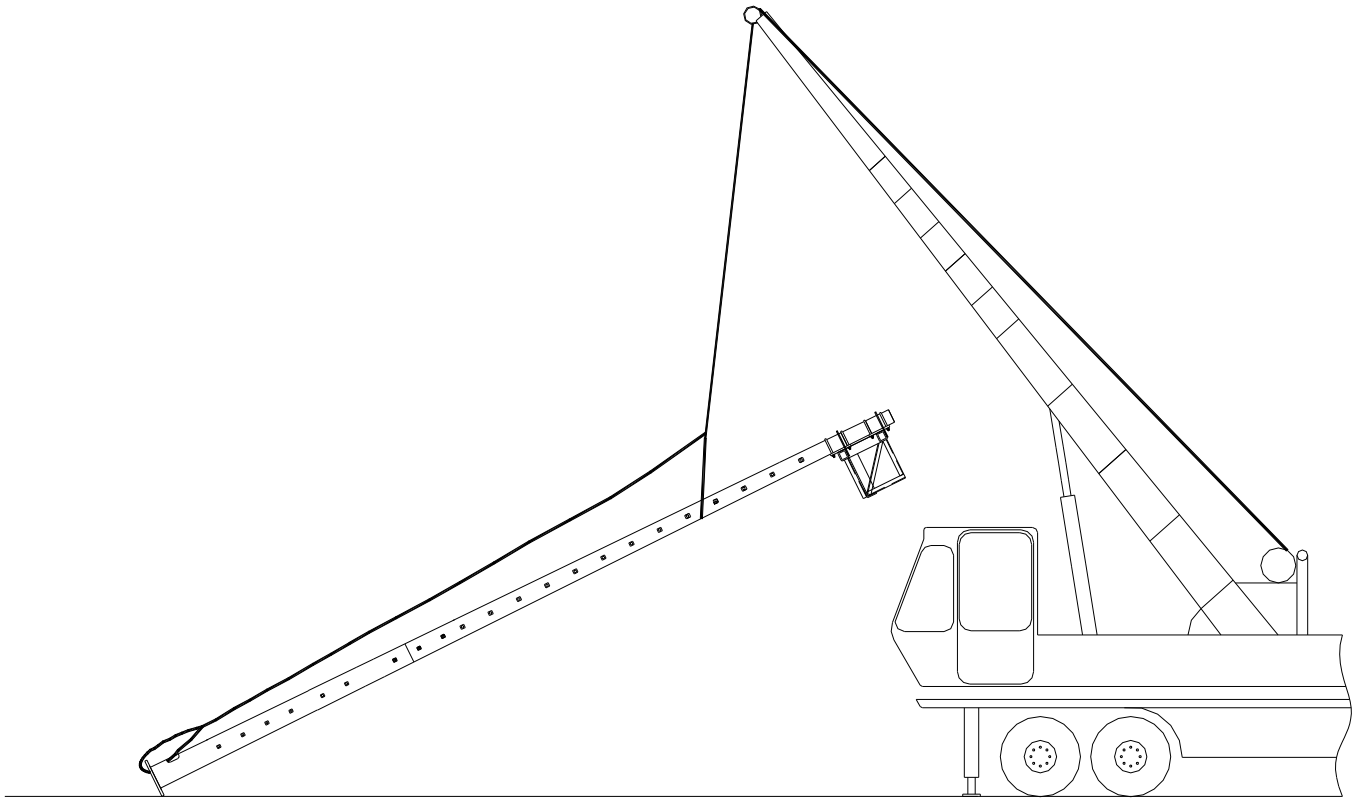

Figure 59 - Pole Erection

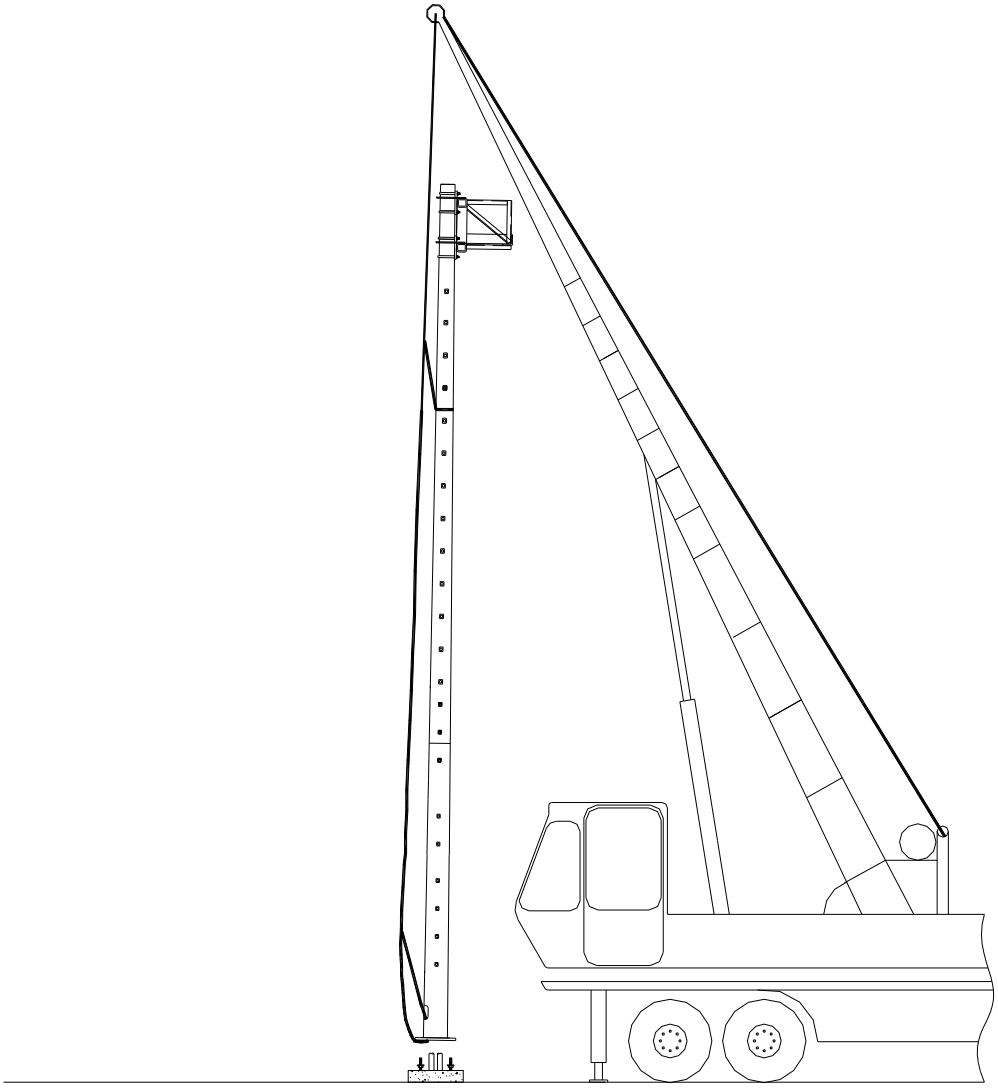

Figure 60 - Pole Erection

VIBRATION & FATIGUE

Although very rare, vibrations severe enough to cause damage can occasionally occur in any type of pole structure. The conditions that induce vibration are a randomly occurring phenomenon. This unpredictable course of nature requires structures to be inspected weekly for the first three months of operation. It is imperative to communicate any pole vibrations to the factory immediately.

Please keep in mind that pole structures will "sway" in the wind. There is a difference between vibrations (i.e. harmonic) and pole sway. Second mode vibrations typically manifest themselves in the middle of the pole structure instead of the top. A second mode vibration problem is detected when the middle of the pole structure is moving (side-to-side) while the top and bottom of the pole are stationary. Some people have referred to this action as a "hula-dance" type motion.

First mode harmonic vibration is harder to detect as this is movement at the top of the pole and can be confused with simple pole sway. Harmonic vibration is a cycle that repeats itself. Such as a back and forth movement that is of the same exact distance and direction from center without variation for an extended period of time. Any movement that does not repeat itself in an opposing direction from the center point is simple pole sway.

Harmonic vibration is more likely to occur when structures are installed without attaching the intended equipment (i.e. light fixtures, arms, signs, etc). Also, harmonic vibrations tend to appear more often in square non-tapered structures more so than any other structural cross-section. Regardless of tendencies to product type, materials, heights, or cross-section type, harmonic vibration occurs as a random act and is an unpredictable phenomenon.

In the event that you have detected or are suspicious of harmonic vibrations, please consult the factory immediately.

Figure 61 - Area Lighting Pole

GENERAL MAINTENANCE

An ongoing maintenance program must include periodic inspection for deterioration of the surface protection barrier and review of the structure in general. A maintenance interval on a semi annual (6-month) basis is recommended to insure timely resolution to minor problems that may occur.

Each maintenance cycle should include a visual inspection of all lighting structures on a given project or venue. It is recommended that binoculars, tape measures, and a logbook be utilized during these reviews. Any suspicious findings should be appropriately communicated to the factory. This would include clear violations in the protective coating such as, but not limited to, scratches, gouges, pealing, dents, or chips. Minor violations should also be communicated such as, but not limited to, severe or uneven fading, or applications of foreign substances (i.e. glue, tar, tape, graffiti, etc.).

During the inspection process the weld connecting the base plate to the pole shaft should be visually inspected for apparent cracks and corrosion. Binoculars should be used to review the attachments of light fixtures or other appurtenances. Any suspected abnormality should be duly recorded and communicated. Pole structures should also be observed for harmonic vibration or suspicion thereof.

Hand hole covers should be securely fastened; anchor base covers (shrouds) or anchor bolt nut covers should be attached. If anchor bolt nuts are visible then a visual inspection of the nuts should be made to insure all are in place and tightened.

The original installer must provide proper electrical grounding and warnings about any electrical hazards in accordance with applicable local codes. General maintenance should include a review of the display for these warnings (if so required). Failure for proper warning display as dictated by local code must be communicated immediately.

Figure 62 - Sports Lighting Pole

MAVERICK
POLES AND STRUCTURE, LLC.
817-441-9688

BOLTED CONNECTIONS

Handling and Storage of Fasteners
Fasteners shall be protected form dirt and moisture at the job site. Only as many fasteners as are anticipated to be installed and tightened during a work shift shall be taken from protected storage. Fasteners not used shall be returned to protected storage at the end of the shift. Fasteners shall not be cleansed of lubricant that is present in as-delivered condition. Fasteners for slip critical connections, which must be cleaned of accumulated rust or dirt resulting from job site conditions, shall be cleaned and relubricated prior to installation.

Turn-of-Nut Method
Bolts shall be installed in all holes of the connection and brought to a snug-tight condition. Snug tight is defined as the tightness that exist when the plies of the joint are in firm contact. This may be attained by a few impacts of an impact wrench or the full effort of a man using an ordinary spud wrench. Snug tightening shall progress systematically from the most rigid part of the connection to the free edges, and then the bolts of the connection shall be retightened in a similar systematic manner as necessary until all bolts are simultaneously snug tight and the connection is fully compacted. Following this initial operation all bolts in the connection shall be tightened further by the applicable amount of rotation specified in Table 2. During the tightening operation, there shall be no rotation of the part not turned by the wrench. Tightening shall progress systematically form the most rigid part of the joint to its free edges.

Tension Calibrator

A tension-measuring device shall be required at all job sites where bolts in slip-critical joints or connections subject to direct tension are being installed and tightened. The tension-measuring device shall be used to confirm that the turn-of-the-nut method produces a tension, which meets or exceed that outlined in Table 1.

Calibrated Wrench Tightening
Calibrated wrenches may be used only when installation procedures are calibrated on a daily basis and when a hardened washer is used under the element turned in tightening. When calibrated wrenches are used for installation, they shall be set to provide a tension not less than 5 percent in excess of the minimum tension specified in Table 1.

Table 1 - Minimum Tension

Nominal Bolt Size (in)	Minimum Tension (kips)	
	A325 Bolts	A490 Bolts
0.500	12.0	15.0
0.625	19.0	24.0
0.750	28.0	35.0
0.875	39.0	49.0
1.000	51.0	64.0
1.125	56.0	80.0
1.250	71.0	102.0
1.375	85.0	121.0
1.500	103.0	148.0

Table 2 - Nut Rotation from Snug-tight

Bolt Length (under side of head to end of bolt)	Disposition of outer face of bolted parts
Up to and including 4 diameters	1/3 turn
Over 4 diameters but not exceeding 8 diameters	1/2 turn
Over 8 diameters but not exceeding 12 diameters	2/3 turn

Note: The information provided above are exerts from the AISC Manual of Steel Construction.

Maverick Poles and Structure, LLC
Fort Worth, TX

817-441-9688

www.maverickpoles.com

email: info@maverickpoles.com

MAVERICK

POLES AND STRUCTURE, LLC.

817-441-9688